Panasonic
BUSINESS

Super Dynamic HD Weatherproof Network Camera

WV-SPW311AL

*i-VMD Type2 : Intruder Detection / Loitering Detection / Direction Detection / Scene Change Detection / Object Detection / Cross Line Detection

HD / 1,280 x 720 60 fps H.264 Weatherproof Network Camera featuring *Super Dynamic*

Key Features

- **720p** HD images up to **60 fps***1
- Approximate 1/3 inches, high sensitivity MOS image sensor
- **Multiple H.264 (High profile) streams (max. 4 streams)** and JPEG streams ensure simultaneous real time monitoring and high resolution recording.
- Maximum Screen Size is 1,920 x 1,080* @30 fps, H.264
  * Used by super resolution technology
- ***Enhanced Super Dynamic***[*1] and ABS (Adaptive Black Stretch) technologies deliver **133 dB** wider dynamic range compared to conventional cameras.
- **Smart coding Technology :** Group of Pictures (GOP) control function removes unnecessary information from the frame for realizing efficient encoding. With the latest bitrate reducing technology, GOP control, 3D-MNR(Multi process Noise Reduction) and FDF(Frequency Divided Filter), the network bandwidth and the disk space of recorder can be saved.
- High sensitivity with Day/Night (ICR*) function :
  0.02 lx (Color), 0.006 lx (B/W) at F1.6
  *ICR: IR Cut filter Removal
- **IR LED** equipped : The equipped infrared LED makes it possible to take pictures at zero lx.
- **IR LED** is controlled to match the environment, thereby the camera provides clear images of human faces without white blur.
- **ABF (Auto Back Focus)** ensures easy installation.
- Newly developed lens with aperture control function realizes the best focus in any environment.
- **VIQS** (Variable Image Quality on Specified area) technology allows the designated **eight areas** to retain higher image quality while the excluded area will have a decreased image quality, which enables to use lower image file size and bit rate.
- Cropping function enables to provide whole image and the part image simultaneously. Up to 4 image capture areas can be specified, and it is also possible to control the sequence.
- ***Face Super Dynamic*** technology ensures clear face image.
- Lens distortion compensation for the distorted images can be adjusted 256 steps.
- Electronic sensitivity enhancement : Auto (Up to 16/30s) / OFF
- Selectable light control modes :
  Outdoor scene,Indoor scene (50 Hz) / Indoor scene (60 Hz),Fix shutter
  Indoor scene (50 Hz/60 Hz) : Flicker caused by fluorescent lightning will be automatically compensated.
- 2x extra optical zoom at 640 x 360 resolution
- 2x, 4x digital zoom controlled by browser
- VMD (Video Motion Detection) with 4 programmable detection areas, 15 steps sensitivity level and 10 steps detection size
- Privacy Zone can mask up to 8 private areas, such as house windows and entrances/exits.
- Camera title display : Up to 20 alphanumeric characters on the browser
- Alarm sources including 3 terminal input, VMD and Panasonic alarm command can trigger actions such as SDXC/SDHC/SD memory recording, FTP image transfer, E-mail notification, Indication on browser, Alarm terminal output, and Panasonic alarm protocol output.
- Full duplex bi-directional audio allows interactive communication between camera site and monitoring site.
- Prioritized stream control : One of the video streams can be prioritized when multiple recorders or client PCs are accessing the camera so that the recorder or the client PC can maintain the frame rate.
- **SDXC/SDHC/SD Memory card slot** for manual recording (H.264 / JPEG), alarm recording (H.264 / JPEG) and backup upon network failure (H.264 / JPEG). Realize long-term recording and auto backup function.
- Can be added new intelligent extension software in addition to built-in VMD (Video Motion Detection), alarm function.
- **Fog compensation function** equipped as standard.
- **HLC (High Light Compensation)** technology reduces strong light sources such as vehicle headlights to prevent camera being blinded.
- **SCC (Super Chroma Compensation)** function realizes a better color reproducibility even in low illumination.
- H.264 max. bit rate/client and Total bit rate control allows flexible network traffic management. Frame rate priority mode controls bit rate and compression ratio to provide the specified frame rate.
- Internet mode : H.264 images can be transmitted over HTTP protocol.
- IPv4/IPv6 protocol supported
- Supports SSL, DDNS (viewnetcam, RFC2136)
- Still images (JPEG) can be viewed on mobile phones via Internet.
- IP66 rated water and dust resistant. Compatible with IEC60529 measurement standard,Type 4X(UL50), NEMA 4X compliant.
- Dehumidification device for use with various weather conditions

*1 Super Dynamic function is automatically set off on 60 fps mode.

Optional Accessory

Adaptor Box
WV-Q120A

Specifications

Camera	Image Sensor		Approx. 1/3 type MOS image sensor
	Scanning Mode		Progressive scan
	Scanning Area		4.86 mm (H) x 3.89 mm (V) {3/16 inches (H) x 5/32 inches (V)}
	Minimum Illumination		Color : 0.02 lx, BW : 0.006 lx (F1.6, Maximum shutter : Max. 1/30s, Gain : On(High)) BW : 0 lx (F1.6, Maximum shutter : Off(1/30 s), Gain : High, when the IR LED is lit) Color : 0.0013 lx, BW : 0.0004 lx (F1.6, Maximum shutter : Max. 16/30s, Gain : On(High)) *1
	IR LED Light		Off / Auto(High / Mid / Low)
	IR LED irradiation distance		Approx. 30 m {98.43 feet}
	White Balance		AWC (2,000 - 10,000 K), ATW1 (2,700 - 6,000 K), ATW2 (2,000 - 6,000 K)
	Light Control Mode		Outdoor scene / Indoor scene (50 Hz) / Indoor scene (60 Hz) / Fix shutter
	Shutter Speed		[1.3 mega pixel [16 : 9] (60 fps mode)] OFF(1/60), 1/100, 1/120, 1/250, 1/500, 1/1000, 1/2000, 1/4000,1/10000 Other than [1.3 mega pixel [16 : 9](60 fps mode)] OFF(1/30), 3/100, 3/120, 2/100, 2/120, 1/100, 1/120, 1/250,1/500, 1/1000, 1/2000, 1/4000, 1/10000
	Super Dynamic *2		On(High) / On(Normal) / Off
	Face Super Dynamic		On / Off (only when Super Dynamic : On)
	Adaptive Black Stretch		On / Off (only when Super Dynamic : Off)
	Fog compensation		On / Off (only when Super Dynamic / Adaptive black stretch : Off)
	High light compensation(HLC)		On / Off (only when Super Dynamic / Adaptive black stretch : Off)
	AGC		On (Low) / On(Mid), On(High) / Off
	Maximum shutter		max. 1/1000 s, max. 1/500 s, max. 1/250 s, max. 1/100 s, max. 1/60 s, max. 2/100 s, max. 1/120 s, max. 2/120s, max. 1/30 s, max. 2/30 s, max. 4/30 s, max. 6/30 s, max. 10/30 s, max. 16/30 s
	Day/Night (ICR)		Off / On / Auto1 (Normal) / Auto2 (IR Light) / Auto3 (SCC)
	Dynamic Range		133 dB typ. (Super Dynamic : On)
	Digital Noise Reduction		High / Low
	Video Motion Detection		4 areas, Sensitivity : 15 steps, Detection size : 10 steps
	Privacy Zone		Up to 8 zones
	VIQS		Up to 8 zones
	Camera Title (OSD)		Up to 20 characters (alphanumeric characters, marks)
	Focus Adjustment		ABF / MANUAL (Html only)
	Lens Distortion Compensation		256 steps
Lens	Vari Focal Length		2.8 mm – 10 mm {1/8 inches – 13/32 inches}
	Angular Field of View		[16 : 9 mode] Horizontal : 28 ° (TELE) - 102 ° (WIDE) Vertical : 16 ° (TELE) - 55 ° (WIDE) [4 : 3 mode] Horizontal : 28 ° (TELE) - 102 ° (WIDE) Vertical : 21 ° (TELE) - 74 ° (WIDE)
	Maximum Aperture Ratio		1 : 1.6 (WIDE) - 1 : 3.4 (TELE)
	Focusing Range		0.3 m - ∞
Adjusting Angle (Camera mount bracket)	Ceiling mounting		Horizontal : ±180° (PAN rotation part) Vertical : 0° to 90° (TILT rotation part) Yaw : -190° to +100° (YAW rotation part)
	Wall mounting		Horizontal : ±90° (TILT rotation part)* Vertical : ±90° (TILT rotation part)* Yaw : -190° to +100° (YAW rotation part)
Browser GUI	Cropping		Off / JPEG(1) / JPEG(2) / JPEG(3) / H.264(1) / H.264(2) / H.264(3) / H.264(4) / H.264(all) Alarm action On / Off
	Camera Control		Brightness, AUX On/Off
	Display Mode		Spot, Quad : Image from 16 cameras can be displayed in 4 different Quad screens or 16 split screen (JPEG only). 20 characters camera title available.
	Digital Zoom		1x, 2x, 4x controlled by browser GUI
	Camera Title		Up to 20 alphanumeric characters
	Clock Display		Time : 12H/24H, Date : 5 formats on the browser, Summer time (Manual)
	Alarm Control		Reset
	One Shot Capture		A still picture will be displayed on a newly opened window.
	Audio		Mic (Line) Input : On / Off Volume adjustment : Low / Middle / High Audio Output : On / Off Volume adjustment : Low / Middle / High
	SD Memory Data Download		Still or motion Images recorded in the SDXC/SDHC/SD memory card can be downloaded.
	GUI / Setup Menu Language		English, Italian, French, German, Spanish, Portuguese, Russian, Chinese, Japanese
	System Log		Up to 100 (Internal) Up to 4,000 (SDXC/SDHC/SD memory when the recording format is set to JPEG.) error logs
	Supported OS *3		Microsoft® Windows® 8.1, Microsoft® Windows® 8, Microsoft® Windows® 7, Microsoft® Windows Vista®
	Supported Browser		Windows® Internet Explorer® 11 (32 bit), Windows® Internet Explorer® 10 (32 bit), Windows® Internet Explorer® 9 (32 bit), Windows® Internet Explorer® 8 (32 bit), Windows® Internet Explorer® 7 (32 bit), Safari, Google Chrome, Mozilla Firefox
Network	Network IF		10Base-T / 100Base-TX, RJ45 connector
	Image Resolution		**•1.3 mega pixel [16 : 9] (30/60 fps)** 1,280 x 720 / 640 x 360 / 320 x 180 / 160 x 90 **•1.3 mega pixel [4 : 3] (30 fps)** 1,280 x 960 / 800 x 600 / 640 x 480 / 400 x 300 / 320 x 240 / 160 x 120 **•2 mega pixel [16 : 9](30 fps mode)** * Used by super resolution technology H.264(1), H.264(2) 1,920 x 1,080 / 640 x 360 / 320 x 180 / 160 x 90 H.264(3), H.264(4) 640 x 360 / 320 x 180 / 160 x 90
	H.264 *4	Transmission Mode	Constant bitrate / VBR / Framerate priority / Best effort / Advanced VBR
		Frame Rate	1 / 3 / 5 / 7.5 / 10 / 12 / 15 / 20 / 30 / 60 fps
		Bit Rate/Client	64 / 128 / 256 / 384 / 512 / 768 / 1,024 / 1,536 / 2,048 / 3,072 / 4,096 / 6,144 / 8,192 / 10,240 / 12,288 / 14,336 / 16,384 / 20,480 / 24,576 / 30,720*/ 40,960* kbps
		Image Quality (Constant bit rate/Best effort)	Image quality (Constant bit rate / Best effort) : Low(Motion priority) / Normal/ Fine (Image quality priority)
		Refresh interval	0.2 / 0.25 / 0.33 / 0.5 / 1 / 2 / 3 / 4 / 5s
		Transmission Type	Unicast / Multicast
	JPEG	Image Quality	10 steps
		Refresh interval	0.1 fps - 30 fps (JPEG frame rate will be restricted when displaying both JPEG and H.264 images.)
		Transmission Type	Pull / Push
	Audio Compression		G.726 (ADPCM) 32 kbps / 16 kbps, G.711 64 kbps / AAC-LC
	Audio Mode		Off / Mic (Line) input / Audio output / Interactive (Half duplex) / Interactive (Full duplex)
	Authentication for Audio		Level 1 only / Level 2 higher / All users
	Total Bit Rate		64 / 128 / 256 / 384 / 512 / 768 / 1,024 / 2,048 / 4,096 / 8,192 kbps / Unlimited
	Supported Protocol		IPv6 : TCP/IP, UDP/IP, HTTP, HTTPS, RTP, FTP, SMTP, DNS, NTP, SNMP, DHCPv6, MLD, ICMP, ARP IPv4 : TCP/IP, UDP/IP, HTTP, HTTPS, RTSP, RTP, RTP/RTCP,FTP, SMTP, DHCP, DNS, DDNS, NTP, SNMP, UPnP, IGMP, ICMP, ARP
	FTP Client		Alarm image transmission, FTP periodic transmission (When the FTP transmissionis failed, backup on an optional SDXC/SDHC/SD memory card is available.)
	No. of Simultaneous Users		Up to 14 users (Depends on network conditions)

Network	SDXC/SDHC/SD Memory Card (Option) * Manufactured by Panasonic (SD speed class 4 or higher) * Use the SD memory card that complies with UHS-1 (Ultra High Speed-1) in the case of SD Speed Class 10.	H.264 recording : Manual REC / Alarm REC (Pre/Post) / Schedule REC/ Backup upon network failure Compatible JPEG recording : Manual REC / Alarm REC (Pre/Post) / Backup upon network failure Compatible SD (SDHC/SDXC) card: Panasonic 2 GB, 4 GB*, 8 GB*, 16 GB*, 32 GB*, 64 GB**, 128 GB** model *SDHC card, ** SDXC card (except miniSD card and microSD card)
	Cellular Phone Compatibility	JPEG image, AUX control (by access level)
	Mobile Terminal Compatibility	iPad, iPhone, iPod touch (iOS 4.2.1 or later), Android™ mobile terminal
Alarm	Alarm Source	3 terminals input, VMD, Command alarm, Audio detection alarm
	Alarm Actions	SDXC/SDHC/SD memory recording, E-mail notification, HTTP alarm notification Indication on browser, FTP image transfer, Panasonic protocol output
	Alarm Log	With SDXC/SDHC/SD memory card : Up to 50,000 logs for each SD memory card
	Schedule	Alarm / VMD / Access permission / H.264 recording / Scene file
Input/ Output	Monitor Output (for adjustment)	VBS : 1.0 V [p-p] / 75 Ω, composite, RCA jack An NTSC or PAL signal can be outputted from camera (either press the INITIAL SET switch quickly (within 1 second) or use software to select either NTSC or PAL signal).
	Microphone/Line Input	ø3.5 mm monaural mini jack (monaural input) (Applicable microphone: Plug-in power type) Supply voltage : 2.5 V ±0.5 V Input impedance : Approx. 2 kΩ (unbalanced)
	Audio Output	ø3.5 mm stereo mini jack (monaural output) Output impedance : Approx. 600 Ω (unbalanced)
	External I/O Terminals	ALARM IN 1 (DAY/NIGHT IN), ALARM IN 2 (ALARM OUT), ALARM IN 3 (AUX OUT)
General	Safety	UL (UL60950-1), C-UL (CAN/CSA C22.2 No.60950-1), CE, IEC60950-1
	EMS	FCC (Part15 ClassA), ICES003 ClassA, EN55022 ClassB, EN55024
	Power Source and Power Consumption	When IR LED is On DC power supply : DC 12 V / 770 mA / Approx. 9.24 W PoE (IEEE802.3af compliant) : DC 48 V / 200 mA / Approx. 9.6 W* (Class 0 device) * Maximum power consumption on the camera power input side. ** ONLY CONNECT DC 12 V CLASS 2 POWER SUPPLY.
	Ambient Operating Temperature	–40 °C to +50 °C (–40 °F to 122 °F)
	Ambient Operating Humidity	10 to 90 % (no condensation)
	Water and Dust Resistance	IP66, IEC60529 measuring standard compatible, Type 4X(UL50), NEMA 4X compliant
	Dimensions * Installing using the base bracket	95 mm (W) x 99 mm (H) x 334.5 mm (L) {3-3/4 inches (W) x 3-57/64 inches (H) x 1ft 1-11/64 inches (L)}
	Mass (approx.)	Approx. 1.6 kg {3.5 lbs}
	Finish	Main body : Aluminum die cast, light gray Front cover section clear part : Clear polycarbonate resin

*1 Converted value
*2 Super Dynamic function is automatically set off on 60 fps mode.
*3 Refer to "Notes on Windows Vista® / Windows® 7 / Windows® 8 / Windows® 8.1" on the provided CD-ROM for further information about system requirements for a PC and precautions when using Microsoft® Windows® 8.1 or Microsoft® Windows® 8 or Microsoft® Windows® 7 or Microsoft® Windows Vista®.
*4 Transmission for 4 streams can be individually set.

Part Names and Functions

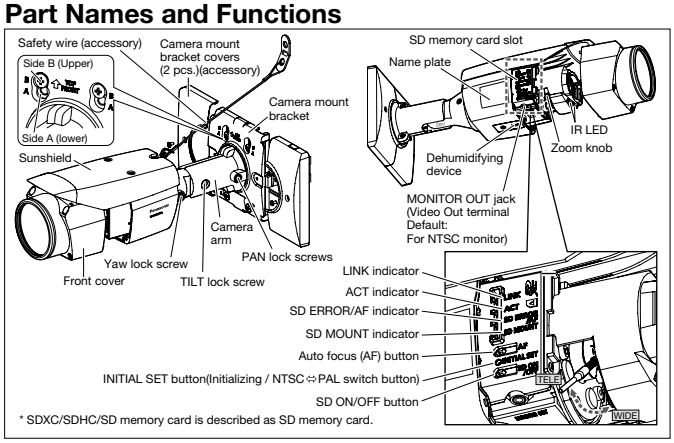

* SDXC/SDHC/SD memory card is described as SD memory card.

Appearance

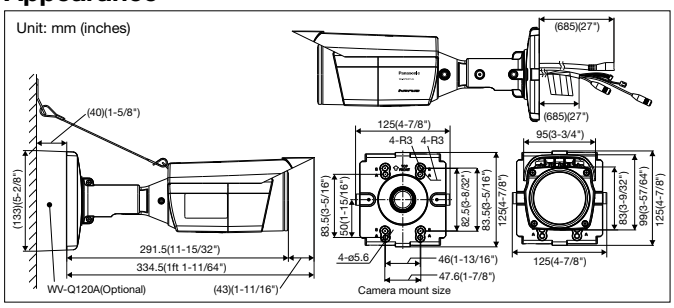

Trademarks and registered trademarks
– Microsoft, and Windows are registered trademarks of Microsoft Corporation in the U.S. and other countries.
– "i-PRO SmartHD" logo is trademark or registered trademark of Panasonic Corporation.
– ONVIF and the ONVIF logo are trademarks of ONVIF Inc.
– All other trademarks identified herein are the property of their respective owners.

Important
– Safety Precaution: Carefully read the Important Information, Installation Guide and operating instructions before using this product.
– Panasonic cannot be responsible for the performance of the network and/or other manufacturers' products used on the network.

• Masses and dimensions are approximate. • Specifications are subject to change without notice.

DISTRIBUTED BY:

Panasonic

http://security.panasonic.com
http://www.facebook.com/PanasonicNetworkCamera

(2A-160BA)